D-CODE ACCESSOIRES #009918

PORTE-SAVON

- D-Code Porte-savon porte savon à droite, Design by Duravit

FINITIONS

10
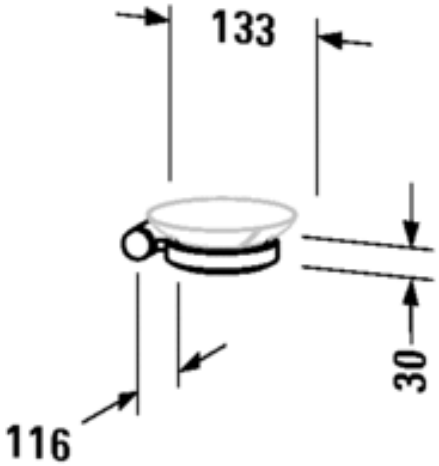
CROQUIS TECHNIQUES